PracticalStudent.com

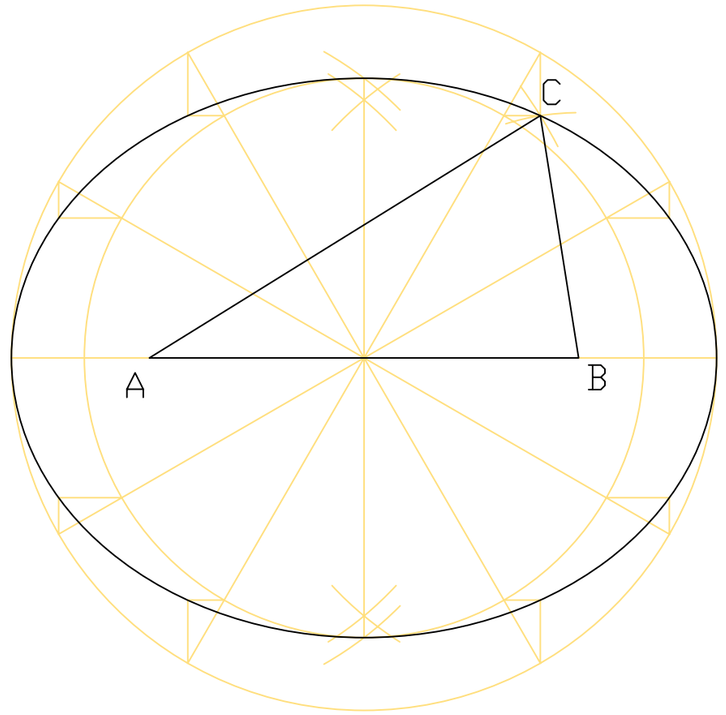

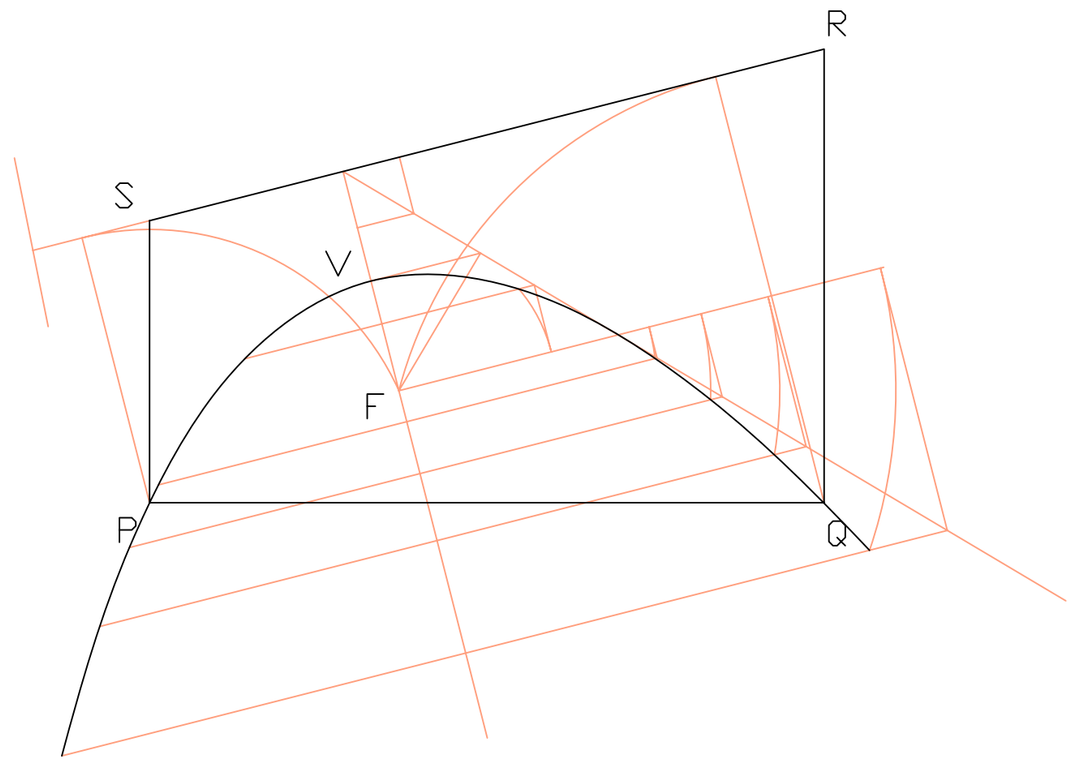

Leaving Certificate	
Paper 1	Conics
OL	
1996	Question 6