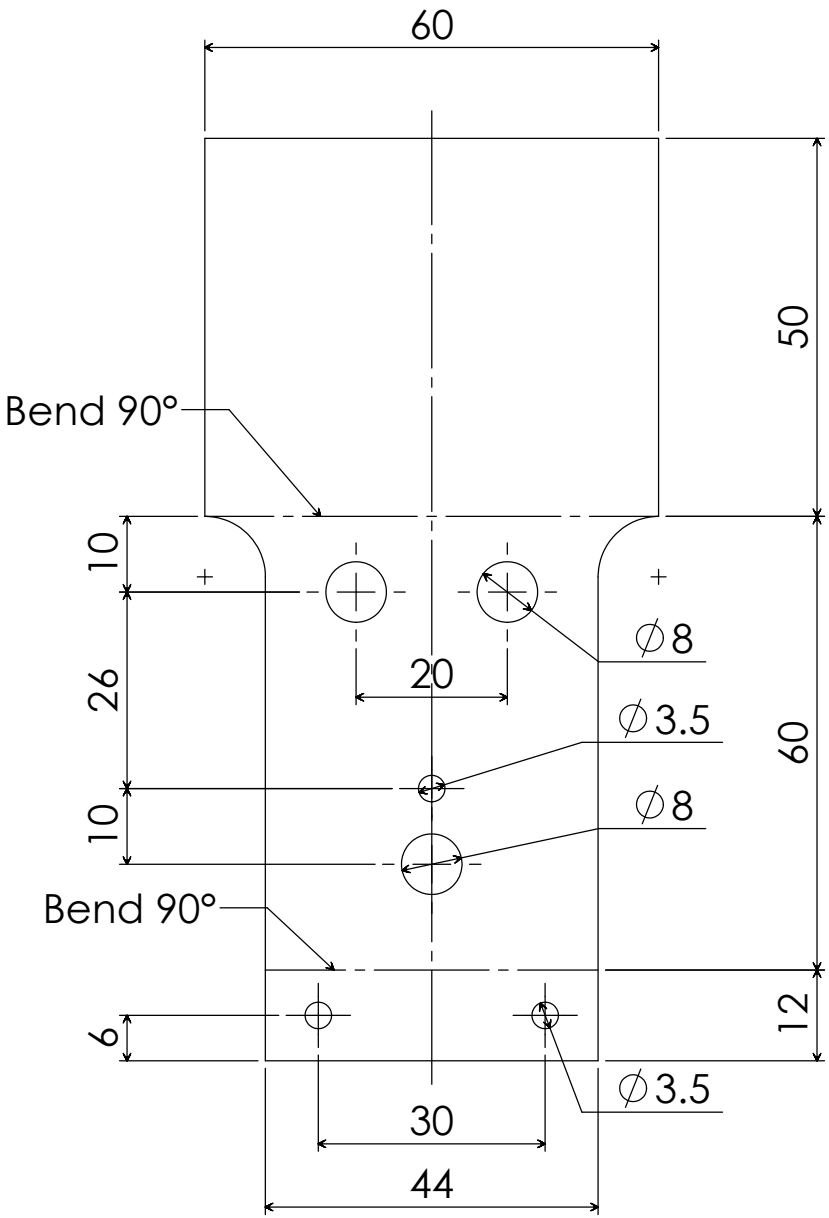

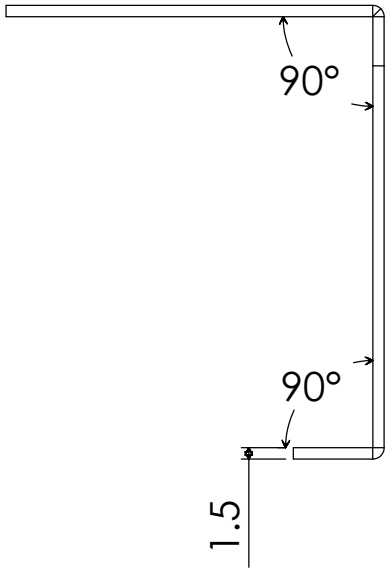

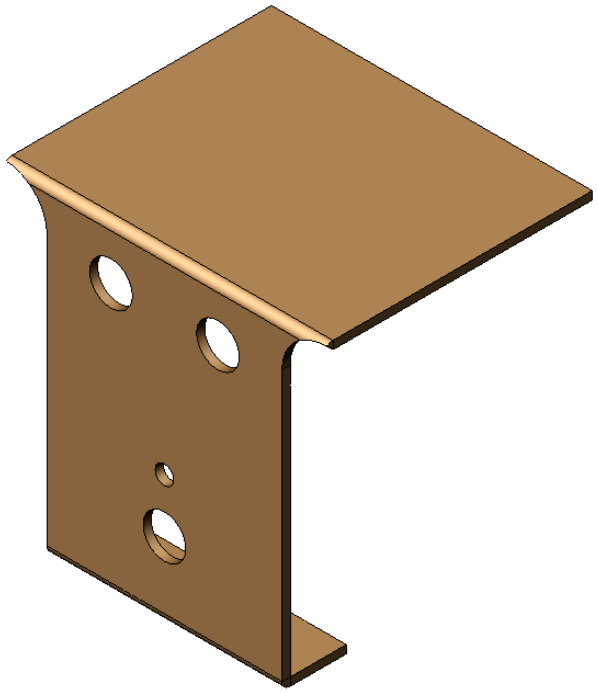

Ordinary Project	2004

PracticalStudent.com

Part Number : 5

Part Name : Cab

Material : Aluminium, Copper or Brass	A4
	26/7/07
Required : 1	Drawing 1 of 1