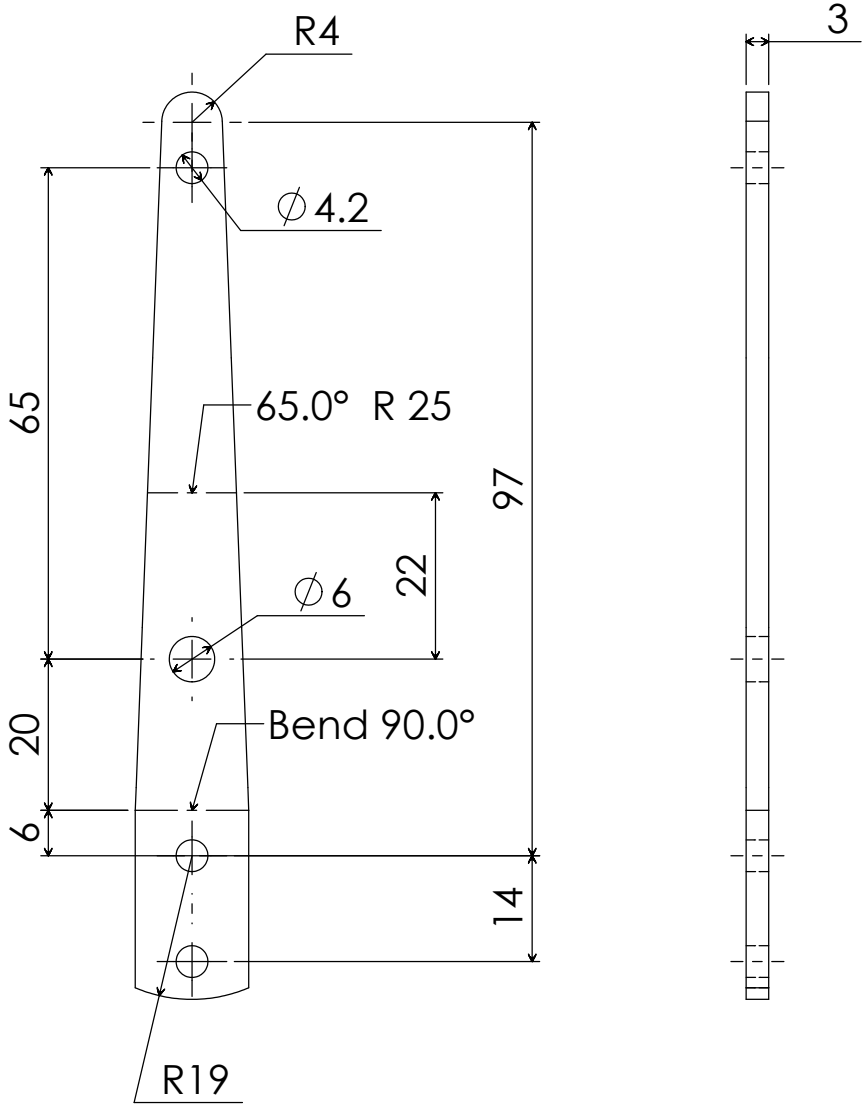

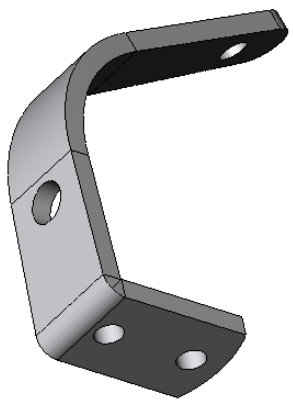

Ordinary Project	2002
PracticalStudent.com	
Part Number : 5 Part Name : Stand	
Material : Aluminium or Steel	A4 26/7/07
Required : 1	Drawing 1 of 1